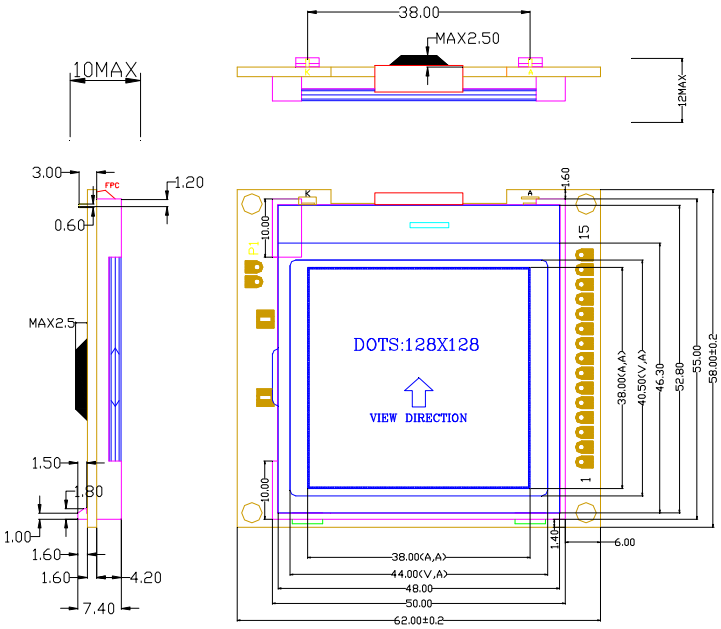

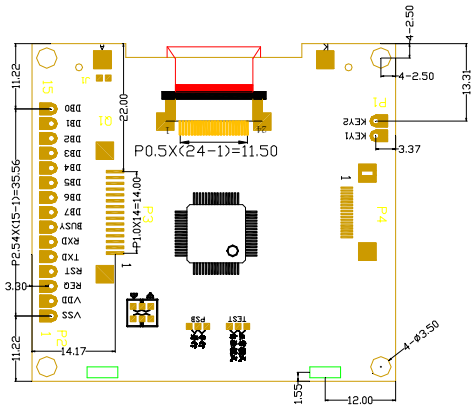

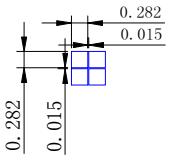

SCALE: 10:1

P 4

1	N.C
2	N.C
3	VSS
4	VSS
5	N.C
6	N.C
7	TXD
8	TXD
9	N.C
10	N.C
11	RXD
12	RXD
13	N.C
14	N.C
15	VDD
16	VDD
17	N.C
18	N.C

P1

PIN NO.	SIGNAL
1	KEY1
2	KEY2

P2,P3

PIN NO.	SIGNAL	PIN NO.	SIGNAL	PIN NO.	SIGNAL
1	VSS	7	BUSY	13	DB2
2	VDD	8	DB7	14	DB1
3	REQ	9	DB6	15	DB0
4	RST	10	DB5		
5	TXD	11	DB4		
6	RXD	12	DB3		

NOTE

1 DISPLAY TYPE : FSTN
2 VIEWING DIRECTION: 6 O'CLOCK
3 POLARIZER MODE : TRANSFLECTIVE/POSITIVE
4 DRIVE METHOD : 1/128DUTY 1/11BIAS
5 OPERATING VOLTAGE: 13.0V
6 LOGIC VOLTAGE : 3.0 V
7 CONTROLLOER IC ST5668A
8 OPERATING TEMP : -20° C----70° C
9 STORAGE TEMP : -30° C----80° C
10 BACK LIGHT : LED

北京中显电子有限公司 **WWW.ZXLCD.COM** **010-82626833**

MODEL NO. : **ZX128128M1A**		UNIT: MM SCALE: 1:1
DESIGNED BY:		DEFAULT TOERANCE: ±0.2
CHECKED BY:		NO. : 1 OF: 1
APPROVED BY:		DATE: